PITCHING

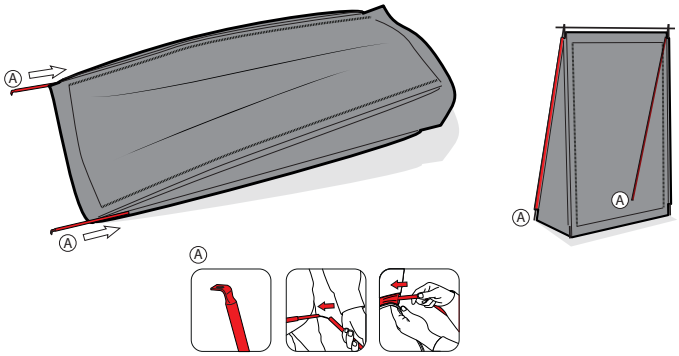

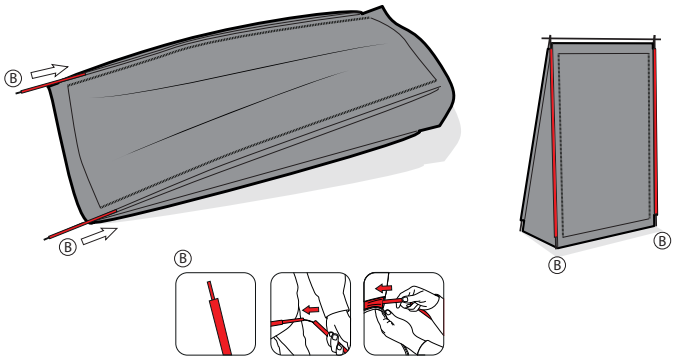

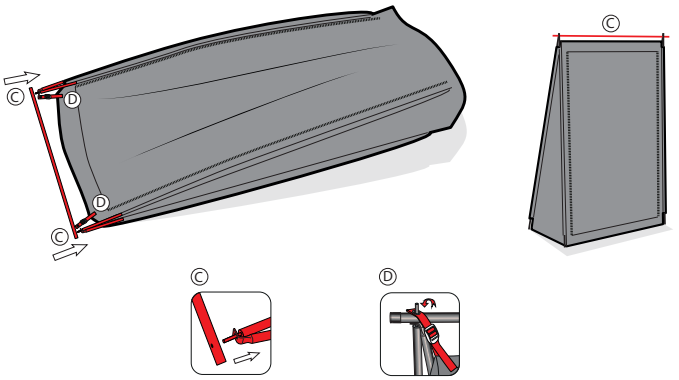

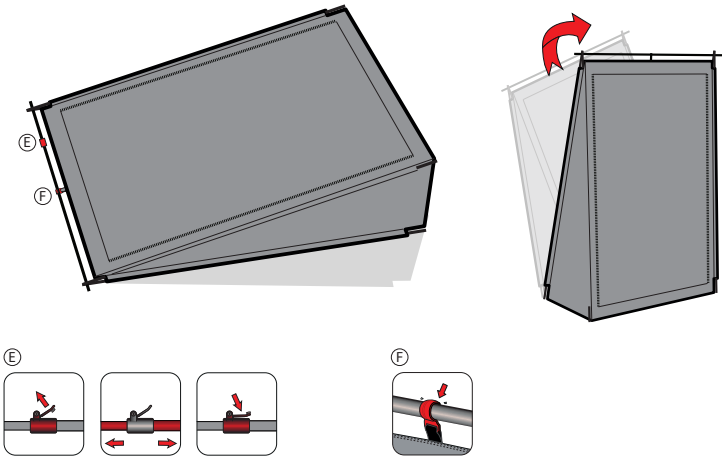

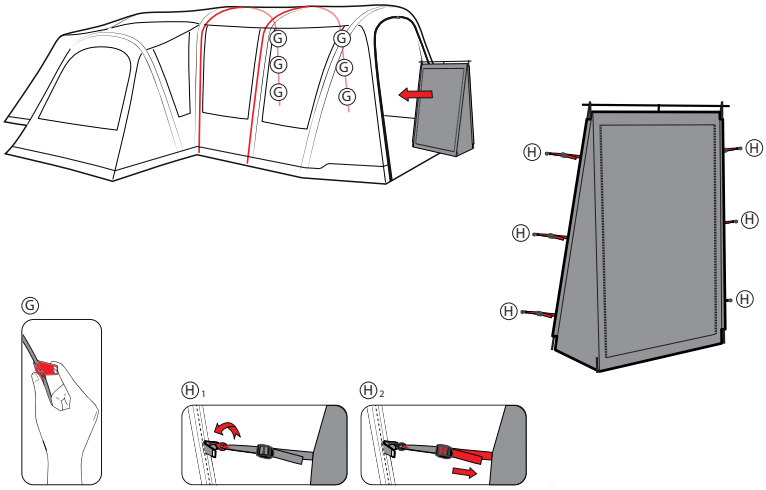

© 11/2023 Oase Outdoors ApS. Made in Bangladesh.